Date: 26/03/2013 Subject to change in the interest of technical progress.	**Technical Data** **Mechanical Ventilation Heat Recovery Unit** **maxi flat 2000**	PAUL® WÄRMERÜCKGEWINNUNG

Unit design of the product line / Product photo:

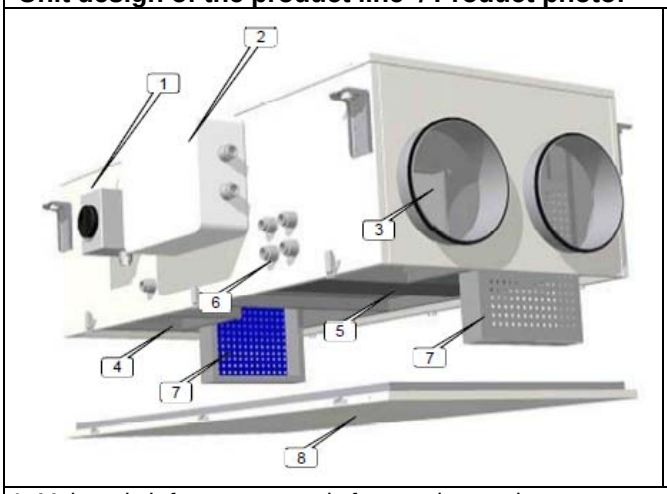

1 Main switch for power supply fans and control
2 Centralized wiring box of the CB4 TAC4 DG circuit (factory pre-wired)
3 Supply fan (right device design)
4 Exhaust fan (right device design)
5 Air/air – heat exchanger and bypass
6 Cable gland for performing condensate hose
7 Filter
8 Access door

Unit dimensions:

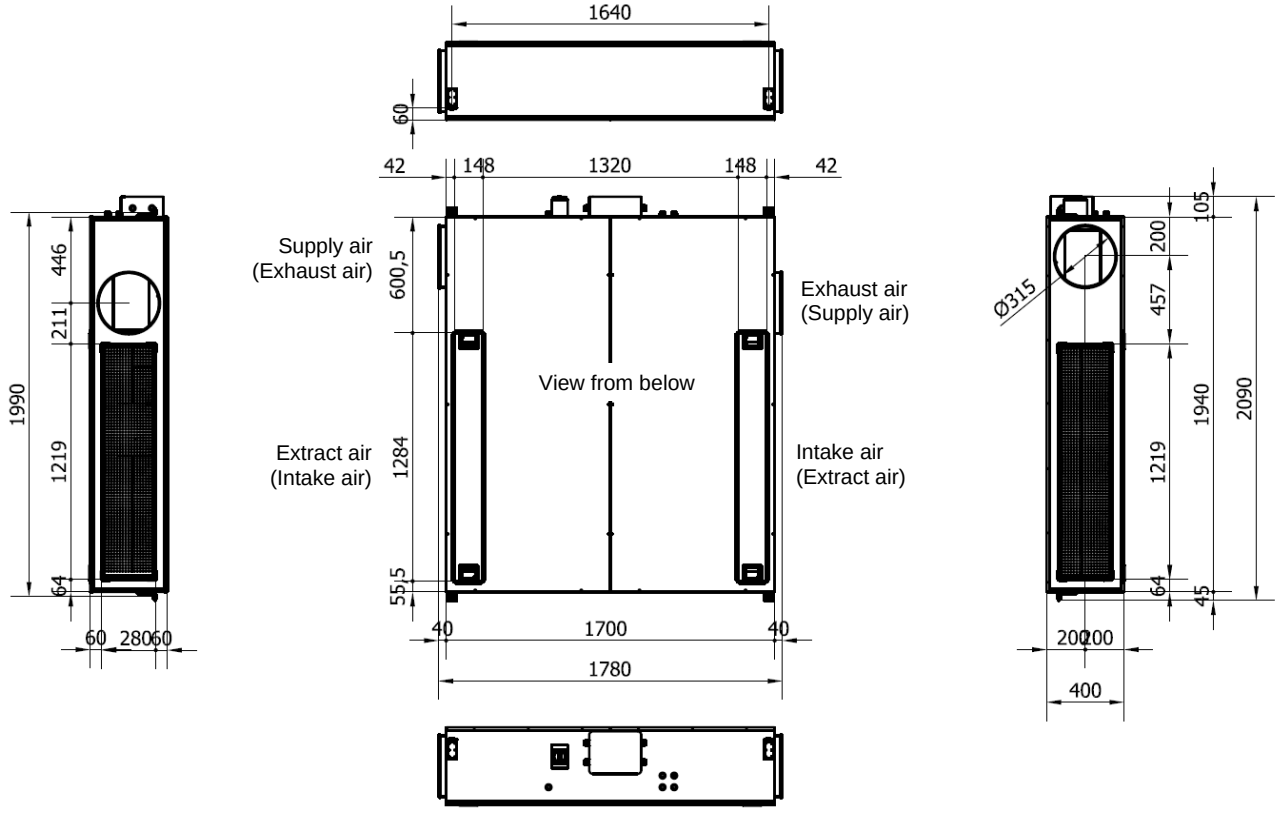

Air connections according left device design
( ) Air connections according right device design

Technical Spezification:	
Air flow:	100 –2000 m³/h
Demension (LxWxH)**:**	(1700 x 2045 x 400) mm
Weight:	302 kg (Base unit without any additional components)
Duct connection:	DN 315 Supply air and exhaust air, Rectangle duct (1219 x 280) mm Intake air and extract air
Electrical connection:	Fans and control devices: 1 x 230 V, 50/60 Hz; on main switch (pre-wired with centralized wiring box) Electric pre-heating, optionally: 3 x 400 V +N, 50/60 Hz;; separate main switch (pre-wired with main switch)
Power input:	2200 W (Base unit without any additional components)
IP Code (acc. to DIN 40050)**:**	IP 44 (Fany) IP 20 (RC TAC4 REC)
Operating range:	-20°C (lower value if option KWin) to +50°C
Heat exchanger:	Aluminum cross counterflow heat exchanger, sea water resistand
Fans:	EC direct current radial fans
Filter:	Filter G4 (Intake air and extract air), optional F7 (Intake air)
Housing:	Compact housing made of an anodised aluminium structure and acoustically and thermally insulated panels in painted steel on the outside (RAL9002) and galvanised steel inside.
Condensate drain:	Stainless steel drip pan, condensate pump and condensate hose ∅ 6 mm (1/4") ID
Summer operation:	motorized summer bypass, temperature-controlled, heat exchanger is 100% shut off

Operating Data:

air flow	Heat exchanger efficiency[1)]	Supply air temperature[1)] (after exchanger)	SFP	Power absorbed[2)]	Sound pessure level[2)] (open field in 3 m distance)
m³/h	**%**	**°C**	**W/m³/h**	**W**	**dB(A)**
500	95,5	20,6	0,08	40	19,8
1000	93,4	19,9	0,21	213	30,9
1500	92,1	19,5	0,40	606	38,5
2000	91,1	19,2	0,65	1293	44,6

[1)] Values for supply and extract air volume flow at t_{Au} = -10 °C, φ_{Au} = 90 % r.F. and t_{Ab} = 22 °C, φ_{Ab} = 50 % r.F.
[2)] at external pressure of 100 Pa

TAC4 control system:

- Fan airflow management (accurate knowledge of fan's working point)
- Management of time slots depending from the control units
- Signaling/information for all alarms
- Fire alarm management
- Boost function
- Automatic bypass control (freecooling)
- Automatic opening and closing motrised dampers (option)
- Automatic anti-freeze protection of the counterflow
- Regulation of external post-heating/cold coil (option)
- Display of all the operating parameters
- Control and display systems via WEB pages (TCP/IP or GPRS modules)

Networking units via MODBUS, KNX, or BAcnet communication

Control options / communications:

RC TAC4, Remote Control with LCD

Size: 122 x 66 mm
Cable to the control unit: IYSTY 2x2x0,6; max. 1000 m; by costumer

TCP/IP TAC4 MODULE
This is a communication module in TCP/IP with built-in web server
This module can be combined with an RC but not with a GRC

GRCTAC4, Grafic Remote Control with touch display
- can control up to 247 units

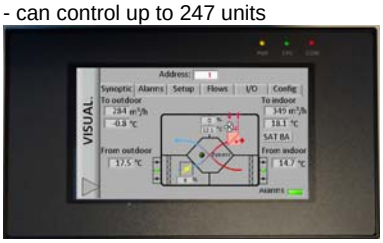

Size: 152 x 87 mm
Cable to the control unit: IYSTY 2x2x0,6 with RS-232-connector; 3 m

GPRS TAC4 MODULE
This is a communication module in GPRS with built-in web server
This module can be combined with an RC but not with a GRC

SAT TAC4 MODBUS MODULE
MODBUS RTU communication circuit to be plugged in the TAC4 regulation circuit.